EC...PA

Sockets for temperature probes

Sockets for temperature probes for pipes.

Dimensions (mm)

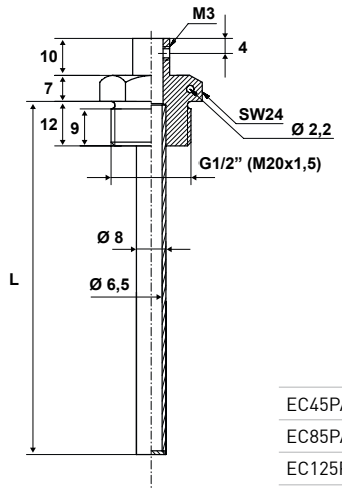

	L
EC45PA	43
EC85PA	83
EC125PA	123

	DN pipe
EC45PA	until DN 50
EC85PA	from DN 65 to DN 80
EC125PA	from DN 100